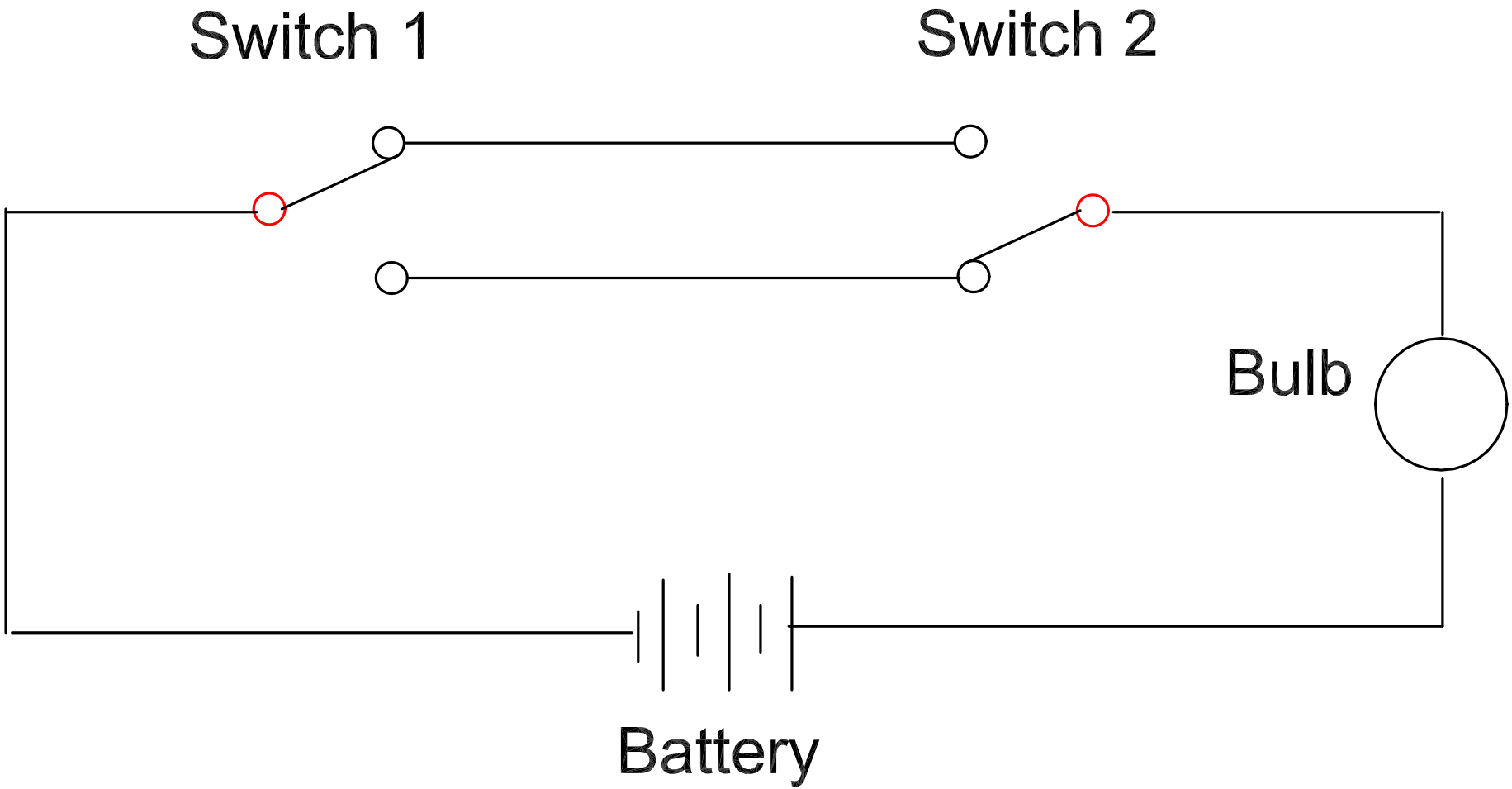
Switch 1
Switch 2
Bulb
Battery